MDL-01

Mechanical Door Lock

- Zinc Alloy
- Remove lock from door to change code
- Code in / Code out: No
- Single code storage only
- For door thickness 35-65mm *(1⅜"-2½")*
- For left or right handed doors
- 2 part 8mm *(5⁄16")* spring loaded spindle
- Internal or external use
- Type to front and back plates only



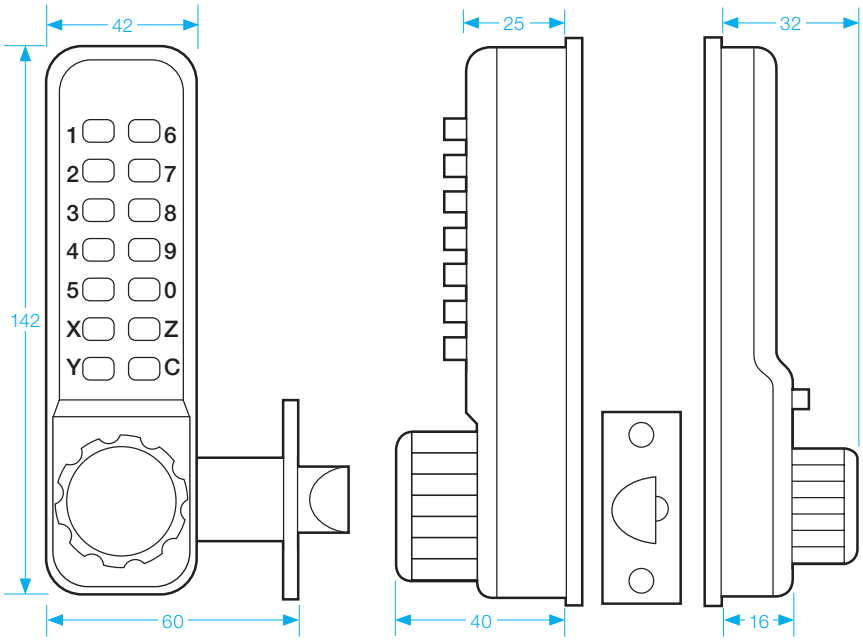

Parts of door lock:

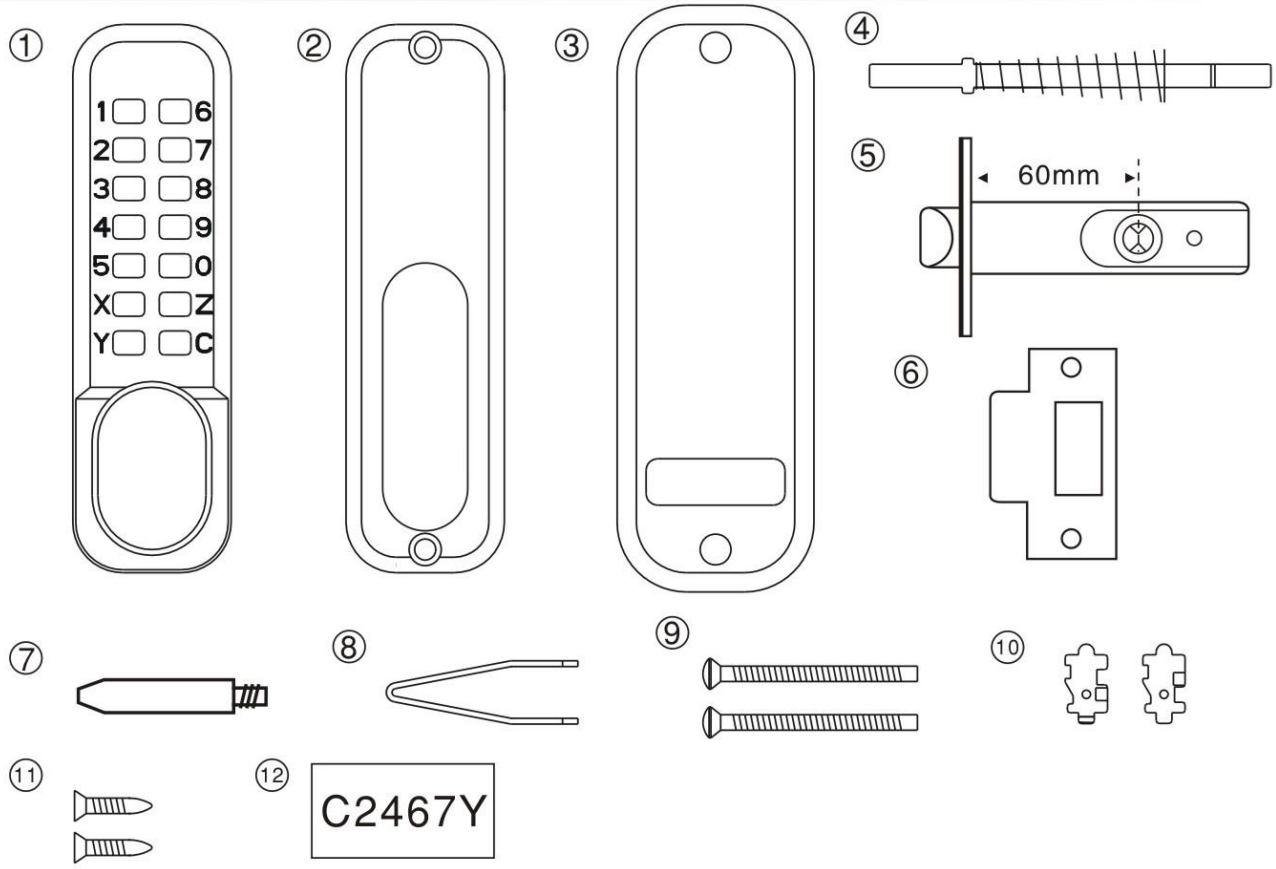

1–Lock Password Box
2–Interior Panel
3–Rubber Cushion
4–Lock Shaft (With spring)
5–Latch (60mm backset)
6–Strike plate
7–Latch support post
8–Password Setting Forceps
9–Fixing Bolts (Length is adjustable)
10–Backup Connection Pin
11–Fixing Wooden Bolt (for fixing lock beam)
12–Password Card

Work Direction of Door:

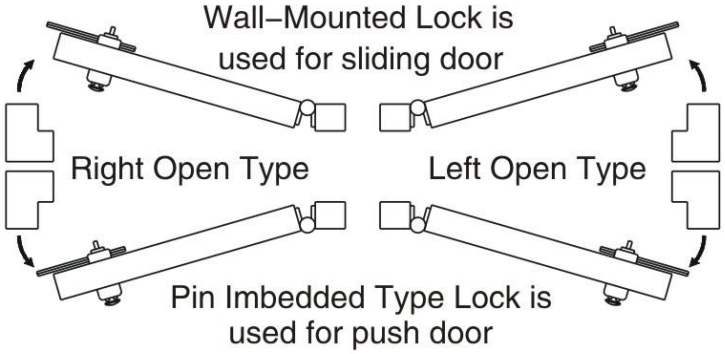

Door is open from right hand side, viewing from the inside part of door, the hinge is at the right side.

The installation direction of parts can be changed if necessary,

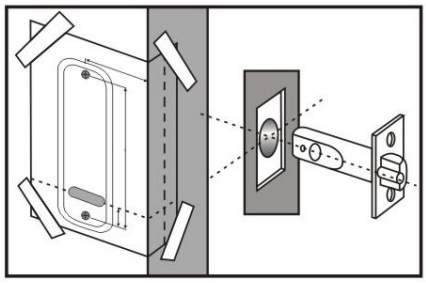

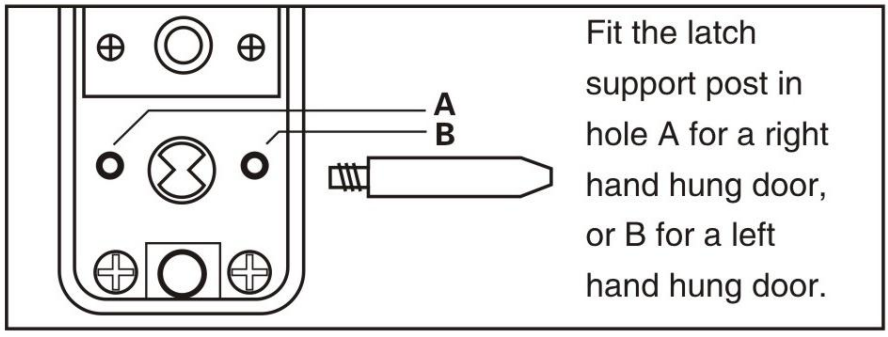

Fit the latch support post in hole A for a right hand hung door, or B for a left hand hung door.

- Tape the template to the door. Make sure that you fold it along the appropriate line, depending on the backset of the latch (60mm Or 70mm).
- Mark and drill all six 10mm holes.
- Use a chisel to clear the line of 4 × 10mm holes into a single slot.

POSITIONING AND FIXING THE LATCH

- Mark a central point on the' centre line of latch' on the door edge.
- Drill a 25mm hole × 85mm deep.
- Insert the latch into the hole, and draw around the face plate.
- Remove the latch and cut a 3mm rebate so that the face plate will fit flush with the door.
- Secure the latch with the wood screws.
- When fitting a backplate to a left–hand door the BLUE screw must go in the right–hand hole and vise versa.

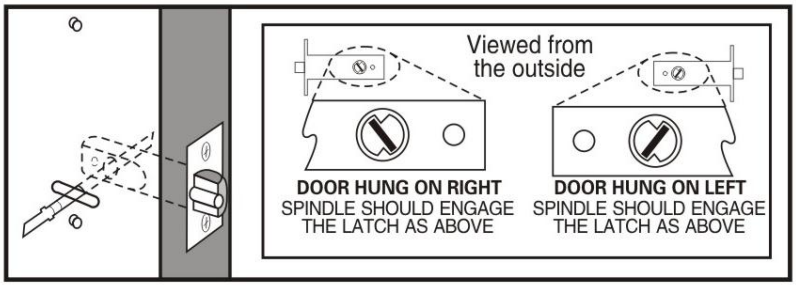

- Select the spindle to suit the thickness of the door.
- Insert the spindle through the slot in the door and makesure that it engages the latch correctly for the hand of the door –(see inset diagram.)

Installation:

Cut the lock shaft and adjust the length of the lock shaft for assuring to completely turn the screw into the password box if necessary according to the thickness of door.

The suitable thickness of door ranges 35mm–55mm according to the square sheet with spring.

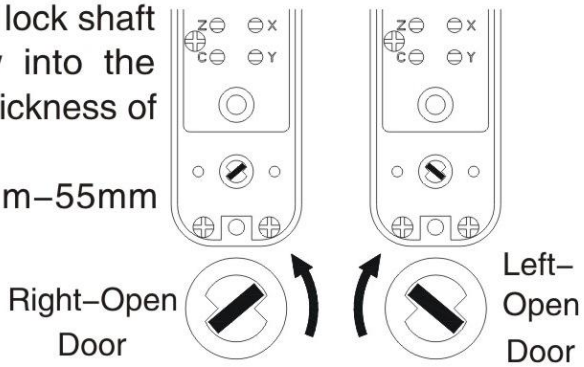

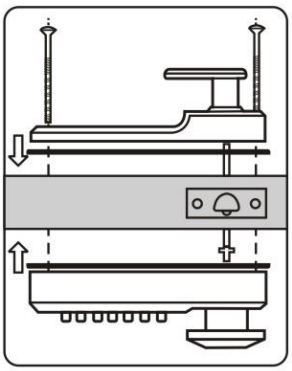

- Cut the fixing bolts to suit the door thickness, allowing at least one threaded section to screw into the lockcase.
- Hold the lock case and the backplate, with the seals, onto the door with the spindle in position.
- Using the fixing bolts screw everything together through the top and bottom holes of the backplate. Before final tigtening make sure the lock is vertical, and test the mechanism to ensure that it is all moving easily.

DO NOT CLOSE THE DOOR UNTIL YOU ARE SURE THAT THE CODE WORKS.

DO NOT over tighten the fixing bolts as this may cause distortion and lead to poor operation.

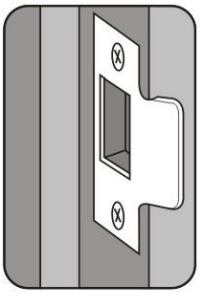

- Position the strike plate on the door so that it lines up with the flat of the latchbolt, NOT THE PLUNGER.
- Mark the inner and outer edges of the strike plate and cut a 1mm rebate so that it fits flush with the surface of the door frame.

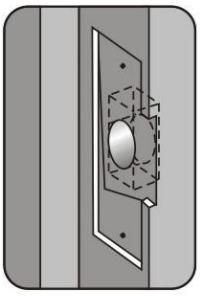

- Drill of cut a recess for the latchbolt.
- Fit the strike plate using only one wood screw as first to ensure that it is positioned accurately. The latch bolt, and not the plunger, should enter the aperture easily, and be held without too much 'play'. When satisfied secure the strike with the second screw.

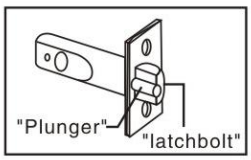

N.B.The plunger beside the latchbolt deadlocks the latchbolt and protects it against manipulation. ITMUST NOT enter the strike plate aperture when the door is closed.